CBV CIRCUIT BALANCING VALVE

CircuitSolver®
A ThermOmegaTech® product

NSF/ANSI 61 and AB1953 Certified

SUBMITTAL

(CS-2013)

JOB	**ORDER NO.:**	**DATE:**
	SUBMITTED BY:	**DATE:**
	APPROVED BY:	**DATE:**
UNIT TAG:		
ENGINEER:		
CONTRACTOR:		

DESCRIPTION

Circuit Solver is a self-acting thermostatic recirculation valve which automatically and continuously maintains the end of each domestic hot water supply line at the specified water temperature. Since the Circuit Solver responds to water temperature and controls flow to the return, it eliminates the need to manually balance the system.

DIMENSIONS

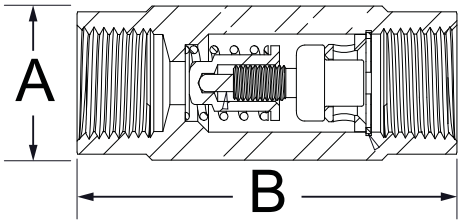

	GPM at 1 PSI Δ P		Diameter (A)		Length (B)		Weight		Max. Pressure		Max Temp.	
Model No.	Cv	NPT	In.	cm	In.	cm	lbs.	kg	PSIG	BAR	°F	°C
CS- ½ -XXX	1.2	½	1.13	2.87	2.75	6.98	0.48	0.22	200	13.8	300	148.9
CS- ¾ -XXX	1.7	¾	1.38	3.50	3.13	7.95	0.79	0.36	200	13.8	300	148.9
CS-1-XXX	3.2	1	1.75	4.45	3.38	8.59	1.60	0.73	200	13.8	300	148.9
CS-1¼-XXX	5.0	1¼	2.13	5.41	4.60	11.68	2.80	1.27	200	13.8	300	148.9
CS-1½-XXX	7.5	1½	2.38	6.05	4.60	11.68	3.50	1.59	200	13.8	300	148.9
CS-2-XXX	14.0	2	3.00	7.62	4.88	12.40	5.60	2.54	200	13.8	300	148.9

Model Number Selection

XXX refers to the desired return water temperature. Use that temperature to complete the model number. For example, if you want 110°F return water and the Circuit Solver is to be installed on a 3/4" line, the model number would be CS-3/4-110.

ThermOmegaTech®
353 Ivyland Road, Warminster, PA 18974
1-877-379-8258 | www.ThermOmegaTech.com

CircuitSolver®
A ThermOmegaTech® product

NSF/ANSI 61 and AB1953 Certified

FLOW RATE CALCULATION USING "CV" FACTOR SHOWN IN TABLE ABOVE (FOR WATER G = 1.0)

$$GPM = C_v\sqrt{\frac{\Delta P}{G}} \qquad C_v = \frac{GPM}{\sqrt{\frac{\Delta P}{G}}} \qquad \Delta P = \left[\frac{GPM}{C_v}\right]^2 G$$

MATERIALS

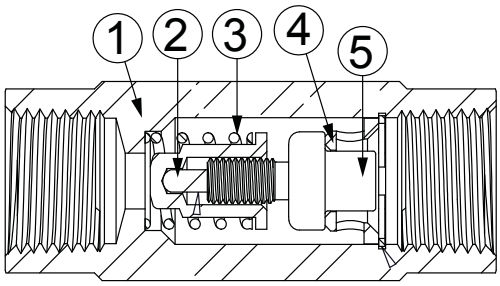

ITEM	DESCRIPTION	MATERIAL
1	Valve Body	303 stainless steel
2	Valve Plug	303 stainless steel
3	Spring	302 stainless steel
4	Carrier	303 stainless steel
5	Thermal Actuator	303 stainless steel

TYPICAL SPECIFICATION

I. Furnish and install CIRCUIT SOLVER as indicated on the plans. CIRCUIT SOLVER shall be self contained and fully automatic without additional piping or control mechanisms. Valve shall be a CIRCUIT SOLVER as manufactured by Therm-Omega-Tech, Inc., or equivalent.

A. CIRCUIT SOLVER shall regulate the flow of recirculated domestic hot water based on water temperature entering the CIRCUIT SOLVER regardless of system operating pressure.

1. Even when fully closed the CIRCUIT SOLVER shall bypass a small amount hot water to maintain dynamic control of the recirculating loop.
2. CIRCUIT SOLVER shall be factory adjustable as required by project conditions.
3. CIRCUIT SOLVER shall be available in sizes ranging from ½ inch NPT to 2" NPT.

II. CIRCUIT SOLVER body and all internal components shall be constructed of stainless steel with major components constructed of type 303 stainless steel.

A. CIRCUIT SOLVER sizes ½ inch through 2 inch shall be rated to 200 PSIG maximum working pressure.

1. All CIRCUIT SOLVER shall be standard tapered female pipe thread, NPT.

B. All CIRCUIT SOLVER shall be rated to 300° F (148.9°C) maximum working temperature.

C. All CIRCUIT SOLVER shall be NSF-61 certified for use in all domestic water systems.

D. Thermal actuator shall be spring loaded and self cleaning, delivering closing thrust sufficient to keep orifice opening free of scale deposits.

III. Installation of CIRCUIT SOLVER shall be made by qualified tradesmen. Install CIRCUIT SOLVER in each domestic hot water return piping branch beyond last hot water device in that branch.

A. Provide suitable line size isolation valves, unions, and strainer as indicated in piping detail shown on the drawings.

B. Provide suitable access panel as required in non-accessible ceilings and walls.

ThermOmegaTech®
353 Ivyland Road, Warminster, PA 18974
1-877-379-8258 | www.ThermOmegaTech.com

FLOWCAL™ Compact automatic flow balancing valve

127 series

CALEFFI

01166/10 NA

ISO 9001 FM 21654 ISO 9001 No. 0003

Function

The FLOWCAL™ automatic flow balancing valve maintains a fixed flow rate within varying system differential pressure ranges.

The design incorporates an exclusive flow cartridge, made of an anti-scale, low noise polymer and a compact low-lead brass valve body for use in cooling, heating and domestic water systems.

Product range

127 series FLOWCAL compact automatic flow balancing valve, with polymer cartridge, NPT or Sweat Union ..... sizes 1/2", 3/4", 1"

Technical specifications

Materials

Body:	low-lead brass (<0.25% Lead content)
Flow cartridge:	anti -scale polymer
Spring:	stainless steel
Seals:	EPDM

Performance

Medium:	water, glycol solutions
Max. percentage of glycol:	50%
Max. working pressure:	232 psi (16 bar)
Working temperature range:	32-212°F (0-100°C)
Connections:	1/2", 3/4"and 1" NPT or Sweat Union
Flow Rate:	16 fixed flow rate settings ranging from 0.5 - 10 GPM
Flow Accuracy:	±10%
Differential Pressure Control Ranges:	2-14, 2-32, 4-34, 5-35 psid

Agency Approval:
Lead Plumbing Law Compliance: (0.25% Max. weighted average lead content)
Lead Plumbing Law Certified by IAPMO R&T

Dimensions

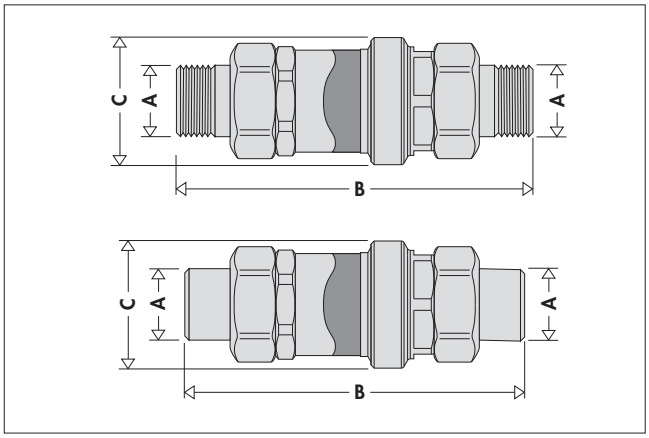

Code	A	B	C	Weight (lb)
127341AF...	1/2" NPT	5 13/16"	1 9/16"	1.0
127349AF...	1/2" Sweat	4 1/4"	1 9/16"	0.8
127351AF...	3/4" NPT	5"	1 9/16"	1.0
127359AF...	3/4" Sweat	4 13/16"	1 9/16"	0.8
127361AF...	1" NPT	5 5/8"	1 9/16"	1.2
127369AF...	1" Sweat	6"	1 9/16"	1.0

CBV CIRCUIT BALANCING VALVE

Circuit balancing

Modern heating and air-conditioning systems have to guarantee a high level of thermal comfort with a low energy consumption. This means supplying the system terminals with the correct design flow rates, to produce balanced hydraulic circuits.

Unbalanced circuits

In case of an unbalanced circuit, the hydraulic imbalance between emitters creates areas with temperatures which are not uniform, and, as a consequence, problems with thermal comfort and higher energy consumption.

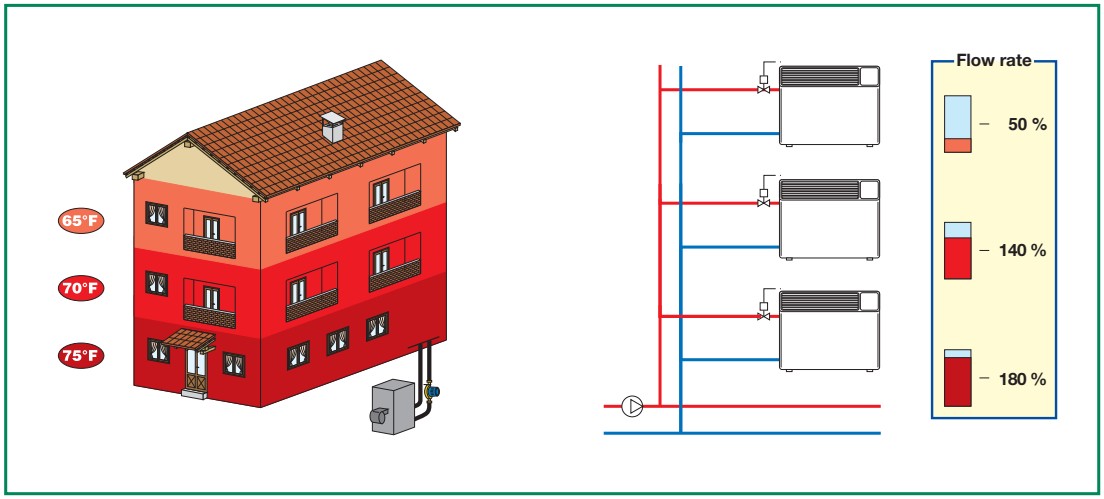

Circuits balanced with manual valves

Traditionally, hydraulic circuits are balanced using manual calibration valves. With these static-type devices, such circuits are difficult to balance perfectly and have operating limitations in case of partial closure by means of the control valves. The flow rate in the open circuits **does not remain constant at the nominal value**.

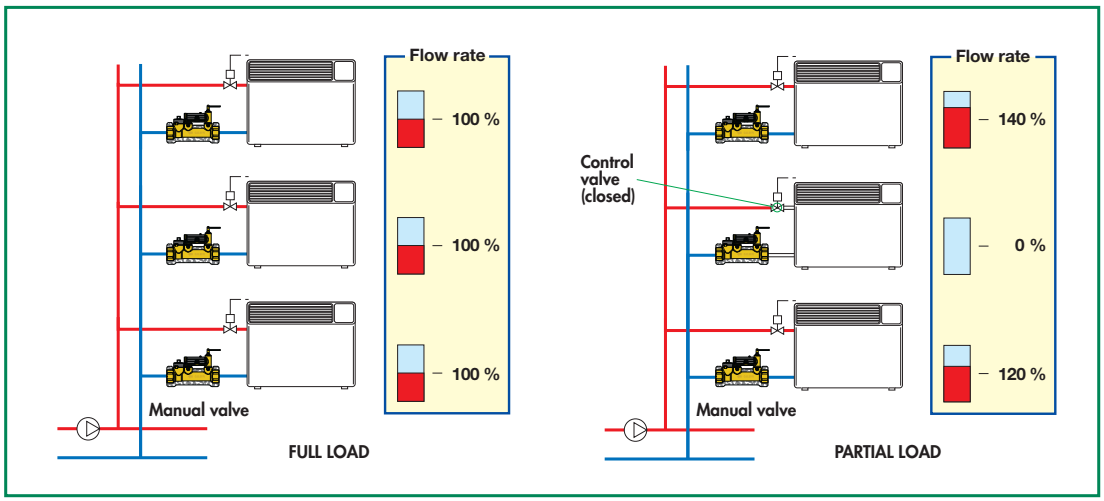

Circuits balanced with FLOWCAL

FLOWCAL balances the hydraulic circuit by automatically controlling the design flow rate to each emitter.
Even with some circuits partially closed by the control valves, the flow rates in the open circuits **remain constant at the nominal value**. The system always provides the greatest comfort and the highest energy savings.

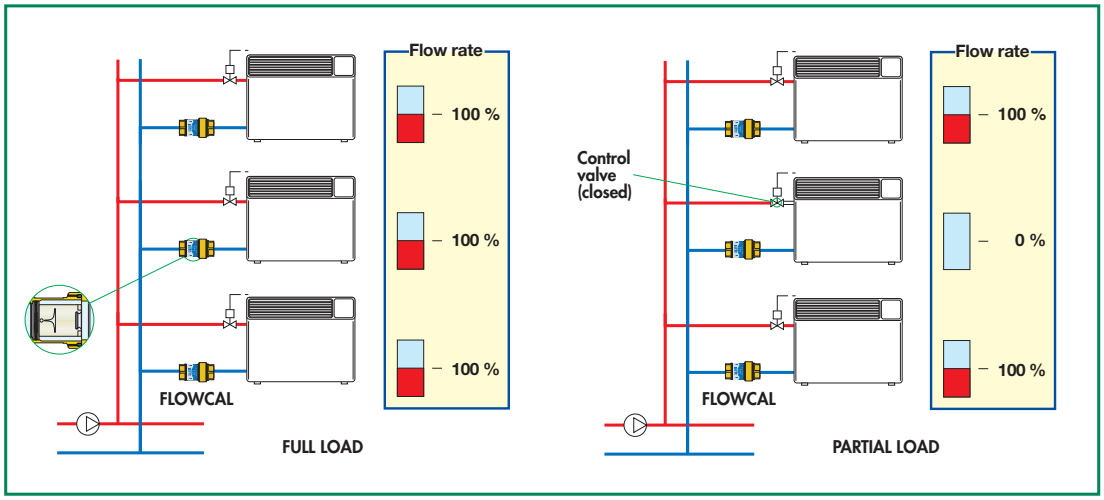

CBV CIRCUIT BALANCING VALVE

FLOWCAL™ Automatic Flow Balancing Valves

Function

The FLOWCAL automatic flow balancing valve guarantees a constant flow rate when the upstream/downstream pressure differential varies. It is therefore necessary to refer to the Δp vs. flow rate diagram and to a basic diagram illustrating the operation methods and the relevant variable effects.

Operating principle

The FLOWCAL flow cartridge is composed of a cylinder, a spring-loaded piston, and a combination of fixed and variable geometric orifices through which the fluid flows. These variable orifice sizes increase or decrease by the piston movement, contingent on the system's fluid thrust. A specially calibrated spring counteracts this movement to regulate the amount of fluid which may pass through the valve orifices, maintaining a balanced system. FLOWCAL valves are high performance automatic flow balancing valves which control selected flow rates within a very tight tolerance (approximately 10%) and offer a wide range of operation.

Below the differential pressure control range (< 2 psid)*

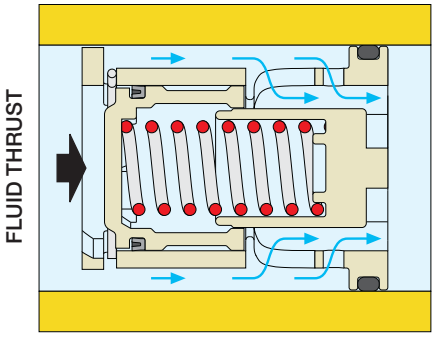

In this case, the spring-loaded regulating piston remains in equilibrium without compressing the spring and gives the fluid the maximum free flow area. When below the differential pressure control range the piston acts as a fixed orifice and thus the flow rate through the FLOWCAL depends only on the differential pressure.

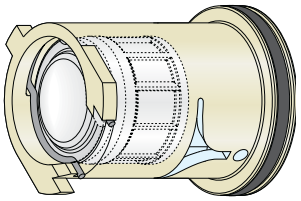

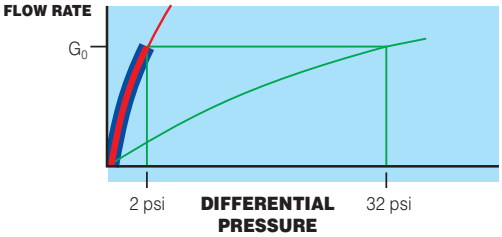

Range Δp 2–32 psi *where G_0 = nominal flow rate*

Within the differential pressure control range (2 - 32 psid)*

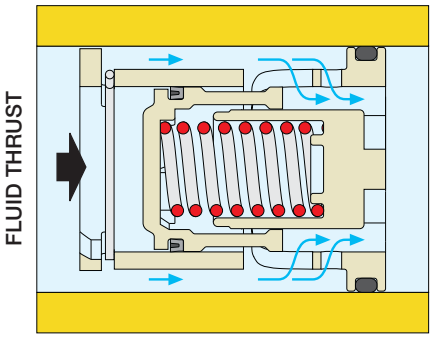

If the differential pressure is within the control range, the spring-loaded piston is positioned to give the fluid a free flow area permiting regular flow at the **nominal rate** for which the FLOWCAL is set up.

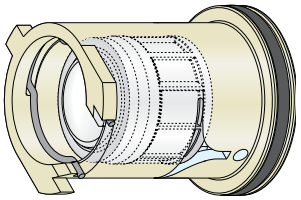

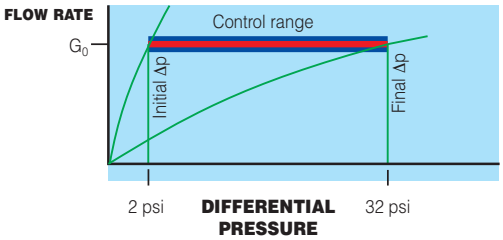

Above the differential pressure control range (> 32 psid)*

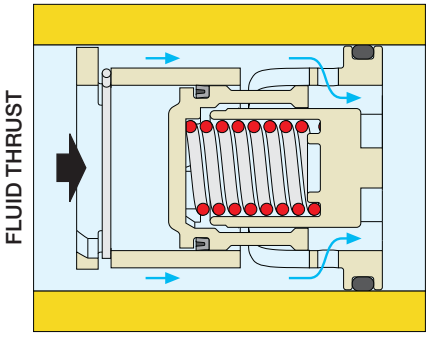

In this case, the spring-loaded piston fully compresses a spring and leaves only the fixed orifice for the fluid to pass through.
The flow rate through the FLOWCAL depends only on the differential pressure.

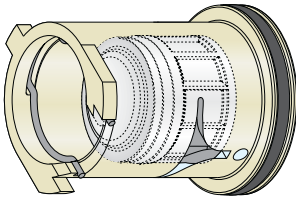

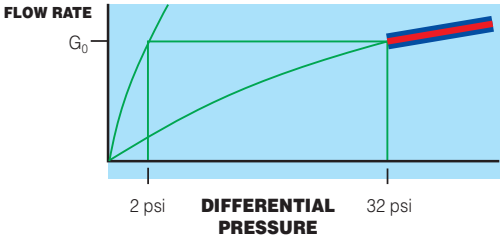

Range Δp 2–32 psi *where G_0 = nominal flow rate*

**These values are for this example. The same logic applies to the other Differential Pressure Control Ranges: 2 -14, 4 - 34, and 5 -35 psid.*

CBV CIRCUIT BALANCING VALVE

Construction details

Polymer flow cartridge
The flow rate cartridge is made of an anti-scale polymer, specially engineered for use in cooling, heating and domestic water systems, to prevent mineral buildup.
Its mechanical behavior is excellent in a wide range of working temperatures, it features high resistance to the abrasion caused by continuous fluid flow, it is insensitive to the deposit of scale and is fully compatible with glycols and additives used in circuits.

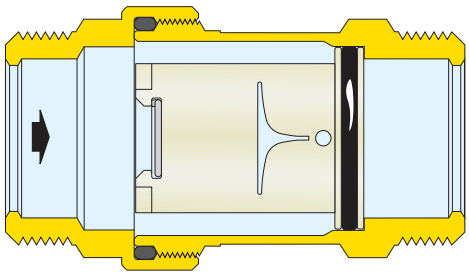

Exclusive design
With its exclusive design, the flow cartridge is able to accurately control the flow rate in a wide range of operating pressures. A special internal chamber acts as a damper for the vibrations triggered by the fluid flow, allowing low noise operating conditions to the device.
For these reasons it can be used in systems both on zone branch circuits and directly at the terminals.

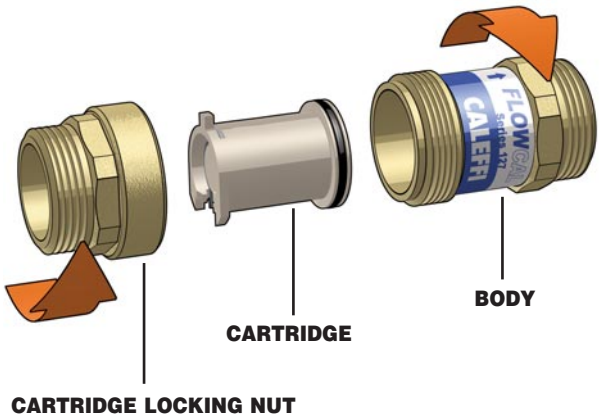

Pump Sizing using FLOWCAL™

Size the hydronic system with FLOWCAL automatic balancing valves as follows:

1. $\Delta P_{MAXCIRCUIT}$
   Determine the pressure head loss for the zone circuit with the greatest pressure drop (flow resistance). This is true for any hydronic system with supply and return headers. As an example, this would be circuit #8 for the 2-pipe direct return system with circuits having identical resistance, illustrated to the right, as it is farthest from the pump. If, however, all circuits are not identical, choose the circuit with the greatest pressure drop.
2. $\Delta P_{MINFLOWCAL}$
   Add the minimum differential operating pressure (2, 4, or 5 psid) required for the FLOWCAL model selected for the circuit with the greatest pressure drop.
3. PUMP HEAD = $\Delta P_{MAXCIRCUIT}$ + $\Delta P_{MINFLOWCAL}$

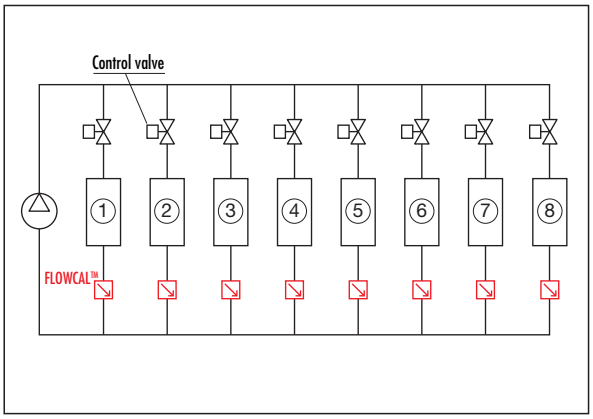

Flow rate table

Code	Size	Flow rates (gpm)	Δp range (psid)
127341AF •••	1/2" NPT	0.50; 0.75; 1.00; 1.50; 2.50; 3.00; 3.50; 4.00; 4.50; 5.00; 6.00; 7.00; 8.00; 9.00; 10.00	2–14
127341AF •••	1/2" Sweat	0.50; 0.75; 1.00; 1.50; 2.50; 3.00; 3.50; 4.00; 4.50; 5.00; 6.00; 7.00; 8.00; 9.00; 10.00	2–32
127341AF •••	3/4" NPT	0.50; 0.75; 1.00; 1.50; 2.50; 3.00; 3.50; 4.00; 4.50; 5.00; 6.00; 7.00; 8.00; 9.00; 10.00	4–34
127341AF •••	3/4" Sweat	0.50; 0.75; 1.00; 1.50; 2.50; 3.00; 3.50; 4.00; 4.50; 5.00; 6.00; 7.00; 8.00; 9.00; 10.00	5–35
127341AF •••	1" NPT	0.50; 0.75; 1.00; 1.50; 2.50; 3.00; 3.50; 4.00; 4.50; 5.00; 6.00; 7.00; 8.00; 9.00; 10.00	
127341AF •••	1" Sweat	0.50; 0.75; 1.00; 1.50; 2.50; 3.00; 3.50; 4.00; 4.50; 5.00; 6.00; 7.00; 8.00; 9.00; 10.00	

Minimum differential pressure required
This is equal to the minimum working Δp of the FLOWCAL cartridge: 2, 4 or 5 psi (13, 27 or 31 kPa).

CBV CIRCUIT BALANCING VALVE

Order Code Numbering for FLOWCAL™ 127 series

Code	Description
127341AF ...	1/2" NPT Male
127349AF ...	1/2" Sweat
127351AF ...	3/4" NPT Male
127359AF ...	3/4" Sweat
127361AF ...	1" NPT Male
127369AF ...	1" Sweat

Select desired flow rate to complete full part number.
No restrictions.

GPM	Last 3 digits ...	Differential Pressure Control Ranges (psid)
1/2	G50	2 - 14
3/4	G75	
1	1G0	2 - 32
1.5	1G5	
2	2G0	
2.5	2G5	
3	3G0	
3.5	3G5	

GPM	Last 3 digits ...	Differential Pressure Control Ranges (psid)
4	4G0	2 - 32
4.5	4G5	
5	5G0	
6	6G0	4 - 34
7	7G0	
8	8G0	
9	9G0	5 - 35
10	10G	

Applications of FLOWCAL™ ( )

Installation of FLOWCAL

In air-conditioning systems, FLOWCAL devices should preferably be installed on the circuit return pipe.
Some typical installation examples are given below.

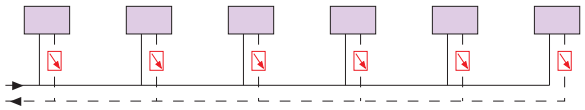

For use in line with various types of heat emitters: radiators, convectors, fan convectors, thermal strips, etc.

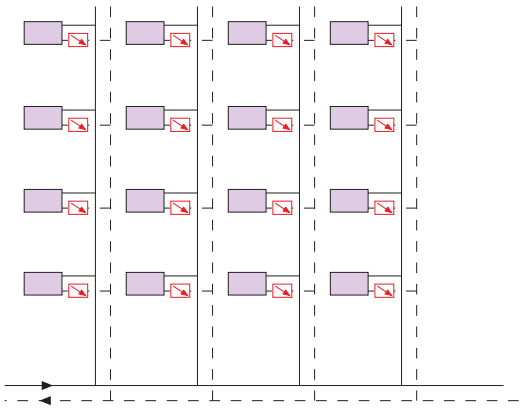

To ensure constant flow rates to each emitter.

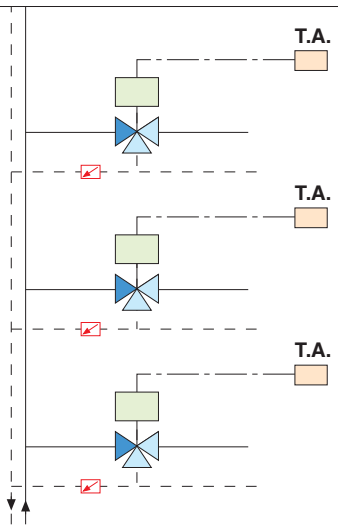

To guarantee the design flow rates (with open or closed valve) to the various zones of a system.

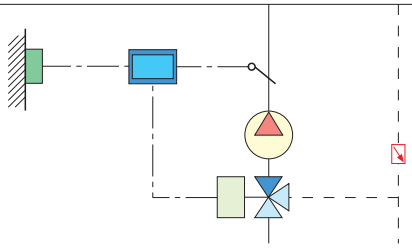

To ensure constant flow rates (in any valve position) in circuits with traditional temperature control.

CBV CIRCUIT BALANCING VALVE

Applications of FLOWCAL™ ( )

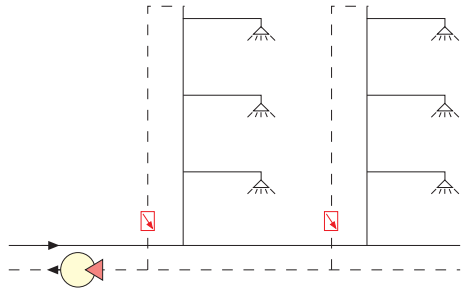

To balance sanitary water distribution circuits.

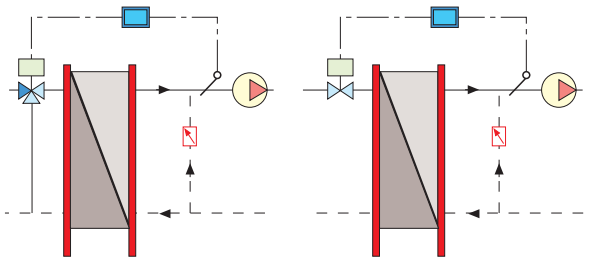

To create heat exchanger flow balancing by-passes

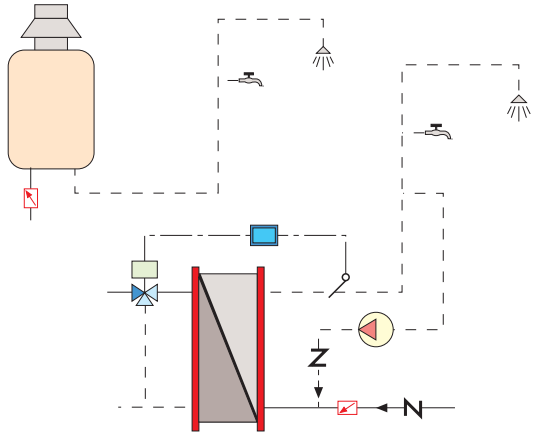

To limit the hot water flow rate delivered in systems with instantaneous production or limited capacity.

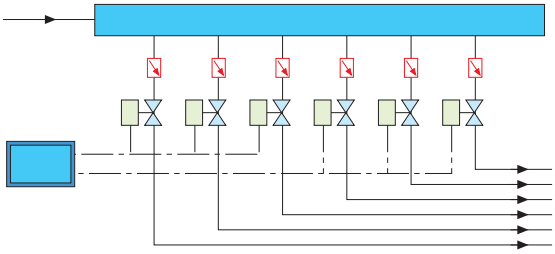

To control the amount of delivered water and balance the various circuits in irrigation systems.

SPECIFICATION SUMMARIES

127 series

Compact automatic flow balancing valve with polymer flow cartridge FLOWCAL™. Connections 1/2", 3/4", 1" union sweat or NPT. Brass body. Anti-scale polymer cartridge. Stainless steel spring. EPDM seals. Water and up to 50% maximum glycol solutions. Maximum working pressure 232 psi (16 bar). Working temperature range 32–212°F (0–100°C). Δp range 2–35 psi. Range of available flow rates for all connection sizes 1/2 - 10 gpm. Accuracy ±10%.

We reserve the right to change our products and their relevant technical data, contained in this publication, at any time and without prior notice.

CALEFFI

Caleffi North America, Inc.
3883 West Milwaukee Road / Milwaukee, WI 53208
Tel: 414.238.2360 / Fax: 414.238.2366 / www.caleffi.us

© Copyright 2010 Caleffi